Site Overview Toilet and DTS

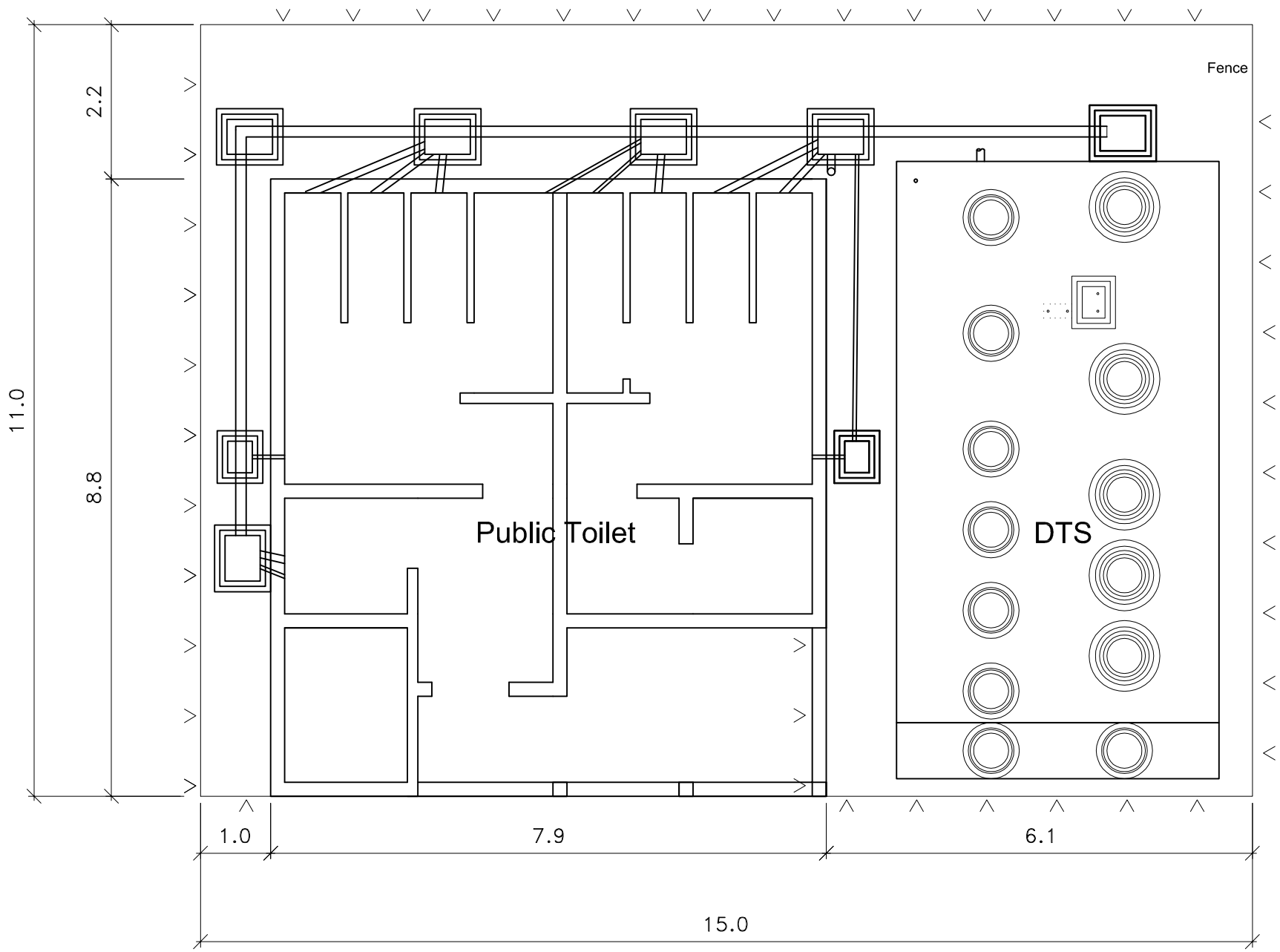

REVISIONS	Date	Sign

NOTES

All dimensions are shown in cm unless otherwise specified. The contractor must check and specify all dimensions on site before commencement of any work.

All soils on cut embarkement to be stabilized. The slope not to exceed the natural angle of repose.

For all R.C. work, refer to Structural Engineer's details.

EU–GTZ EcoSan PROMOTION PROJECT
Contract No. 9ACP RPR 39/68

European Union, Water Facility
SIDA (Swedish International Development Agency),
GTZ (German Technical Cooperation)

Ministry of Water and Irrigation
Nairobi / Kenya

Drawing Title:
PUBLIC TOILET WITH DTS

Drawing Sub–Title:
Site Overview

drawn:
Rieck

Approved by:
EcoSan Project Manager
Patrick Onyango

scale:
no

paper:
–

date:
22–10–2009

sheet no:
WSTF–DTS–1

.....
Signature

Top View Chambers DTS

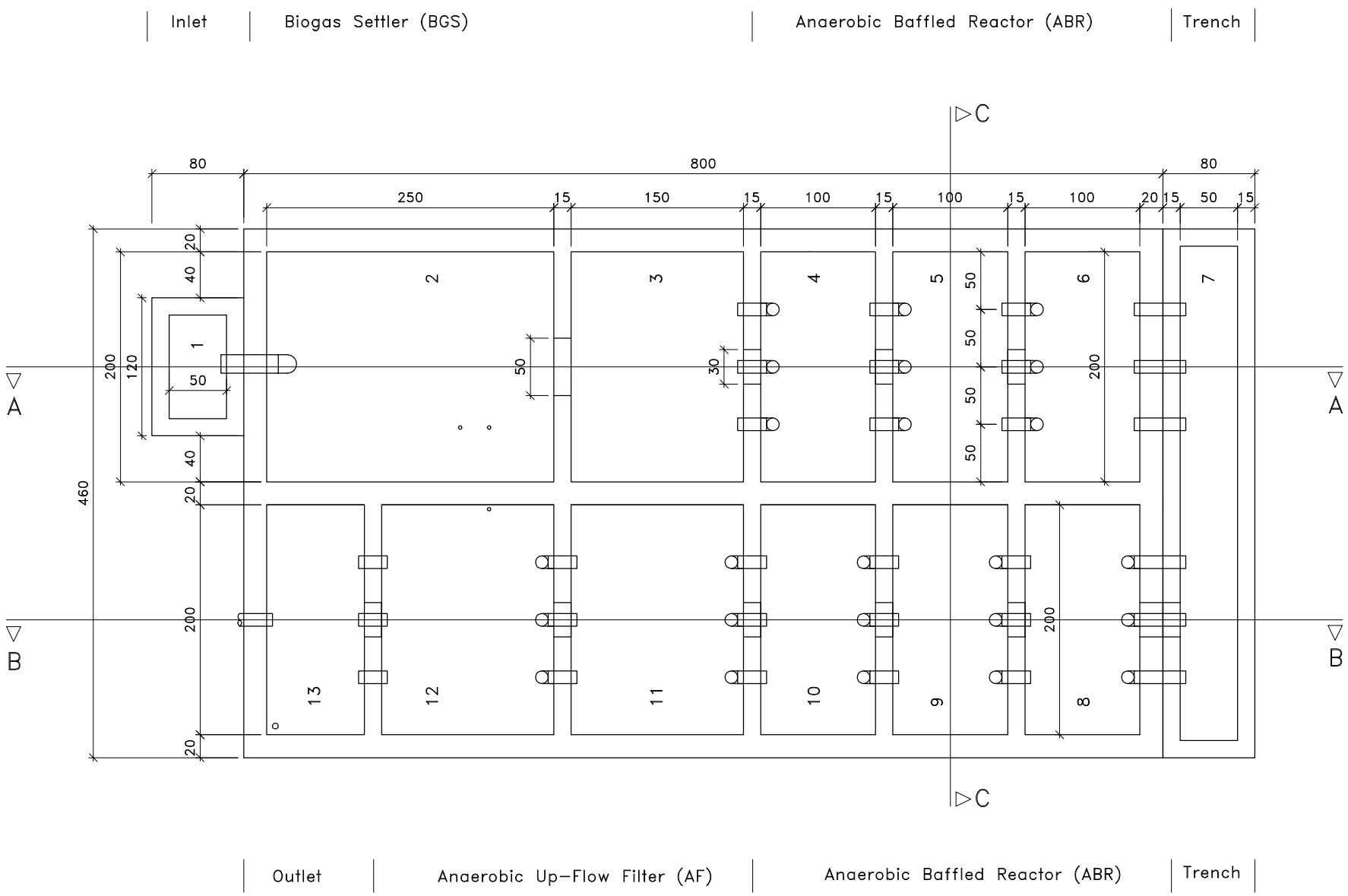

REVISIONS	Date	Sign

NOTES

All dimensions are shown in cm unless otherwise specified. The contractor must check and specify all dimensions on site before commencement of any work.

All soils on cut embarkement to be stabilized. The slope not to exceed the natural angle of repose.

For all R.C. work, refer to Structural Engineer's details.

EU-GTZ EcoSan PROMOTION PROJECT
Contract No. 9ACP RPR 39/68

European Union, Water Facility
SIDA (Swedish International Development Agency),
GTZ (German Technical Cooperation)

Ministry of Water and Irrigation
Nairobi / Kenya

Drawing Title:
SETTLER/DTS-2m

Drawing Sub-Title:
Top View Chambers

drawn:
Rieck

Approved by:
EcoSan Project Manager
Patrick Onyango

scale:
no

paper:
–

date:
22-10-2009

sheet no:
DTS/2M/S-2

.....
Signature

DTS Cross Section A–A

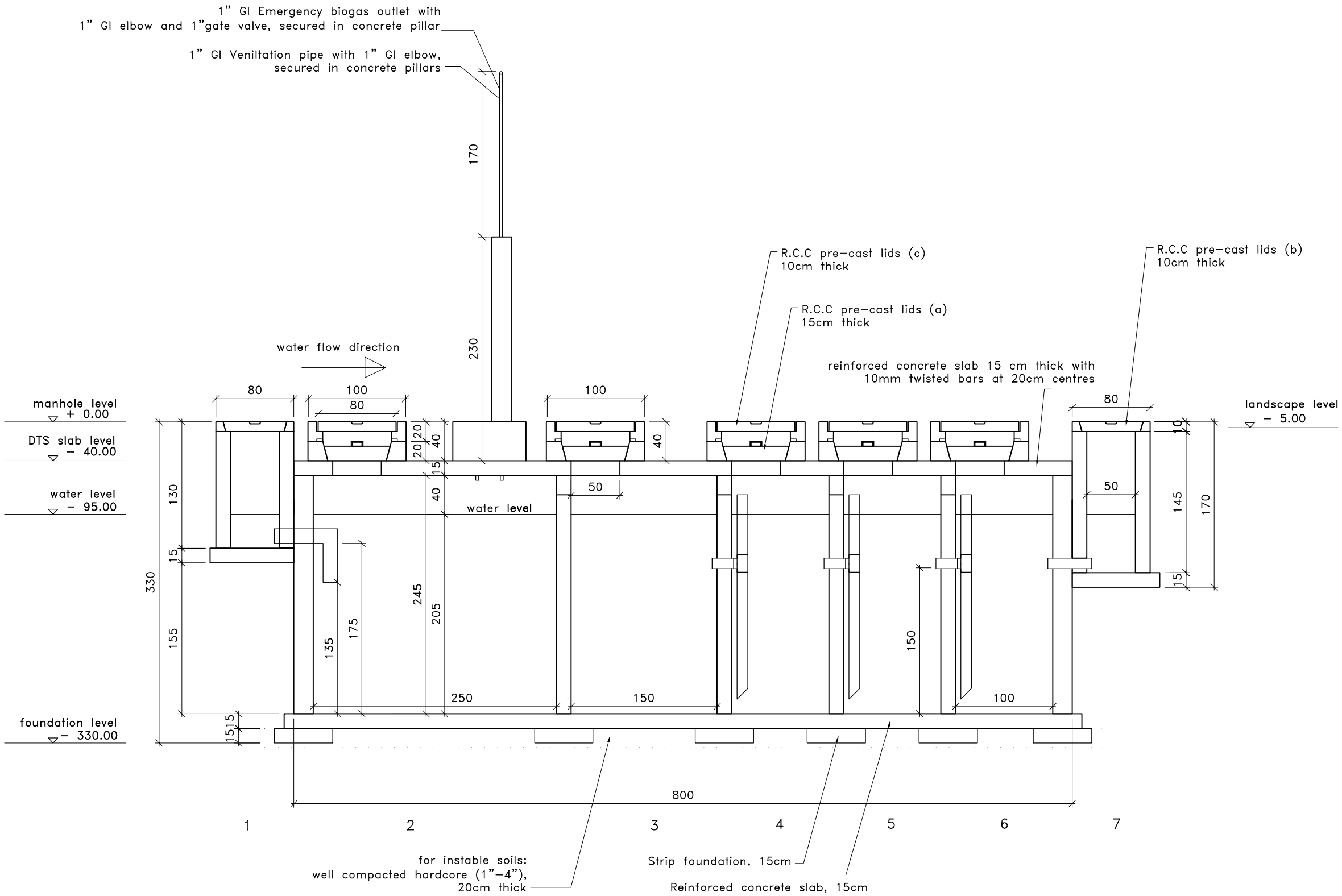

REVISIONS	Date	Sign

NOTES

All dimensions are shown in cm unless otherwise specified. The contractor must check and specify all dimensions on site before commencement of any work.

All soils on cut embarkement to be stabilized. The slope not to exceed the natural angle of repose.

For all R.C. work, refer to Structural Engineer's details.

EU–GTZ EcoSan PROMOTION PROJECT
Contract No. 9ACP RPR 39/68

European Union, Water Facility
SIDA (Swedish International Development Agency),
GTZ (German Technical Cooperation)

Ministry of Water and Irrigation
Nairobi / Kenya

Drawing Title:
SETTLER/DTS–2m

Drawing Sub–Title:
Cross section A–A

drawn:
Rieck

Approved by:
EcoSan Project Manager
Patrick Onyango

scale:
no

paper:
–

date:
22–10–2009

.....
Signature

sheet no:
DTS/2M/S–7

DTS Cross Section B–B

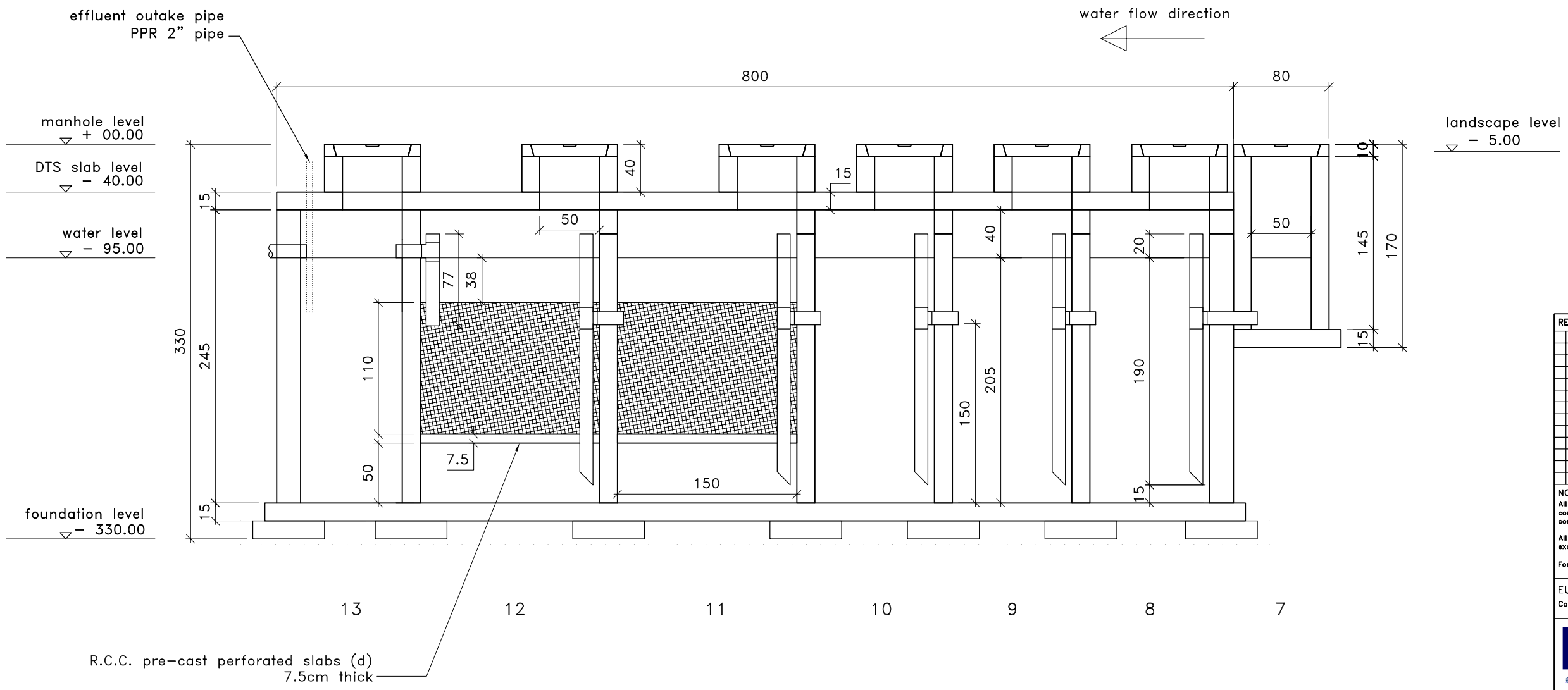

REVISIONS	Date	Sign

NOTES

All dimensions are shown in cm unless otherwise specified. The contractor must check and specify all dimensions on site before commencement of any work.

All soils on cut embarkement to be stabilized. The slope not to exceed the natural angle of repose.

For all R.C. work, refer to Structural Engineer's details.

EU–GTZ EcoSan PROMOTION PROJECT
Contract No. 9ACP RPR 39/68

European Union, Water Facility
SIDA (Swedish International Development Agency),
GTZ (German Technical Cooperation)

Ministry of Water and Irrigation
Nairobi / Kenya

Drawing Title:
Settler/DTS–2m

Drawing Sub–Title:
Cross Section B–B

drawn:
Rieck

Approved by:
EcoSan Project Manager
Patrick Onyango

scale:
no

paper:
–

date:
22–10–2009

sheet no:
DTS/2M/S–8

.....
Signature

DTS Cross Section C–C

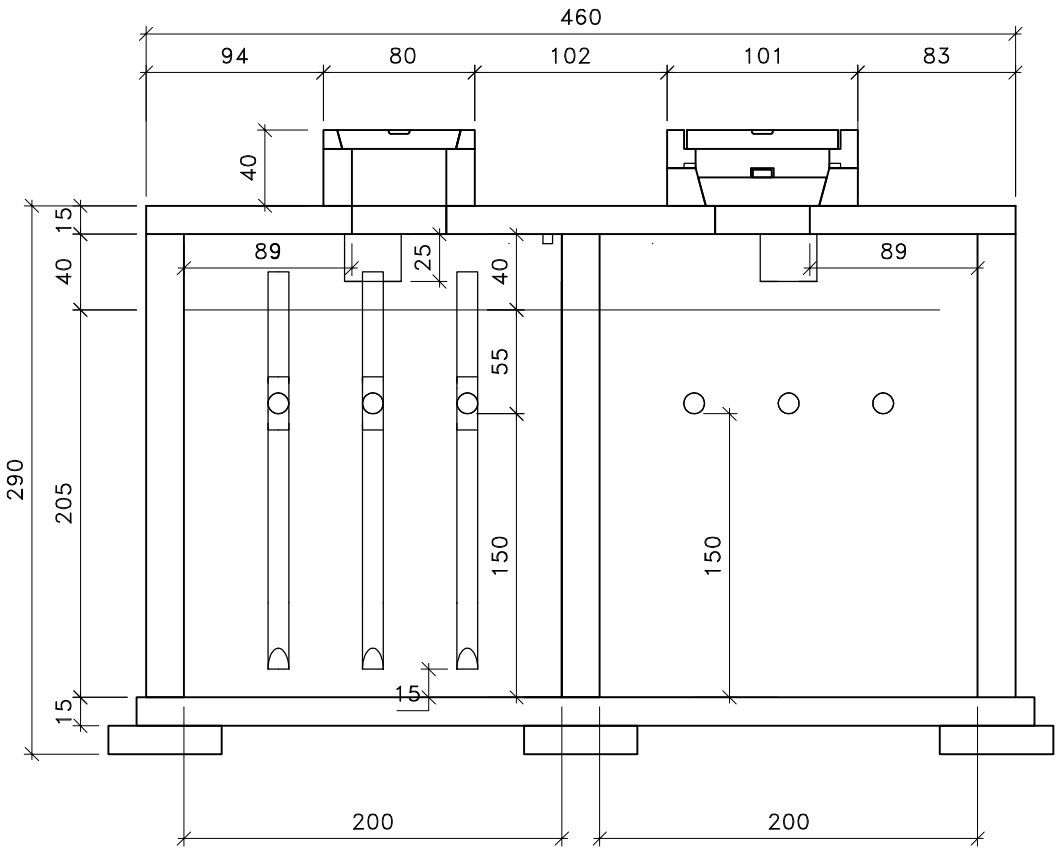

REVISIONS	Date	Sign

NOTES

All dimensions are shown in cm unless otherwise specified. The contractor must check and specify all dimensions on site before commencement of any work.

All soils on cut embarkement to be stabilized. The slope not to exceed the natural angle of repose.

For all R.C. work, refer to Structural Engineer's details.

EU–GTZ EcoSan PROMOTION PROJECT
Contract No. 9ACP RPR 39/68

European Union, Water Facility
SIDA (Swedish International Development Agency),
GTZ (German Technical Cooperation)

Ministry of Water and Irrigation
Nairobi / Kenya

Drawing Title:
SETTLER/DTS–2m

Drawing Sub–Title:
Cross section C–C

drawn:
Rieck

Approved by:
EcoSan Project Manager
Patrick Onyango

scale:
1 : 40

paper:
A3

date:
22–10–2009

sheet no:
DTS/2M/S–9

.....
Signature